XIV Configuration list

NO.	Name	Specification	Quantity	Remark
1	Lamp head	LED-70W	1	
2	Center handle	—	1	
3	Spring arm	—	1	
4	Central column	—	2	
5	Handle	—	1	
6	Base	—	1	
7	Power cord	0.752x3x1.8m	1	
8	Fuse	F2AL250V-φ5x20mm	1	
9	Installation tools	4# hex socket wrench	1	
10	User manual	A5	1	
11	Certificate	—	1	

2025-03-05 version 1

KD-2018L-1 Operation Lamp

USER MANUAL

NANJING YANAN SPECIAL LIGHTING FACTORY

Content

I Brief introduction.....1

II Performance summary.....1

III Main technical parameters.....1

IV Security tips and symbol instructions.....2

V Working environment.....3

VI Product interface.....3

VII Usage.....4

VIII Attentions.....6

IX Failure judgment and eliminating methods.....7

X Bulb replacement.....8

XI After-sales service and warranty.....8

XII Transportation and storage condition.....8

XIII Warranty card and maintenance card.....9

XIV Configuration list.....10

XIII Warranty card and maintenance card

Warranty card

Company name:			
Address		Phone No.	
Product name		Model	
Serial Number		Manufacture date	
Sale date			
Fault description:			
Remark: The warranty of our products is 18 months since release date.Please keep the certificate and instruction properly, and send it back with the product when repairing.			

(Please truthfully fill in this form, cut it according to the dotted line and send it back to our company, thank you for your cooperation)

Maintenance card

Company name:			
Address		Phone No.	
Product name		Model	
Serial Number		Manufacture date	
Sale date			
Fault description:			
Note: if you use this card beyond warranty period, you can enjoy 30% discount repair service.			

X Bulb replacement

The bulb of the operation lamp is LED light source, normal life is up to 10000 hours, no need to replace normally. In case of any failure, please inform the manufacturer in time for processing.

XI After-sales service

◆The product warranty period is 18 months
◆During warranty period, send or give us your warranty card and purchase invoices, we will provide free maintenance service when you have quality problems.
◆Light bulbs are consumable accessories.
◆If you modified the function by yourself and then it does not work , is not covered under warranty.
◆If the marks on the product such as model, serial number, date of manufacture has been altered, deleted, moved, or unidentifiable, will not provide free warranty service.
◆Failure caused by human factors such as falling, squeezing, soaking and damp is not covered by the warranty
◆The production date is shown on label, service life is 5 years, we provide lifetime maintenance.
◆After-sales No.:+86-25-52777091
Telephone(WeChat):+86-13675197193

XII Transportation and storage condition

Environment temperature: -40℃～55℃
Relative humidity: 30%~80%
Atmospheric pressure: 500hpa~1060hpa

I Brief introduction

The KD-2018L-1 operation lamp uses high-power LEDs as the light source, with high adjustable brightness, daylight color, no temperature rise on the surface of object, and long lifetime. It is mainly composed of mobile base, middle column, spring arm and lamp head.

The diameter of the lamp panel of this product is 300mm, which is larger than the common examination lamps and smaller than that of shadowless lamps. It overcomes the shortcomings of the examination lamp, such as uneven light distribution, low illuminance, shallow illumination depth, and the high price of the large lamp panel shadowless lamps. The base is equipped with wheels for easy movement; the lamp head can freely rotate 300° and is operated by the center handle, allowing for multi-angle lighting. It is suitable for outpatient examination and surgery lighting in fields such as dental, medical beauty, veterinary medical, and obstetrics and gynecology, as well as for examination lighting in medical education and family wards.

II Performance summary

1. The product adopts a low-voltage output cold light lighting design in its design and employs a wide-voltage power supply system. Low-pressure energy-saving, stable performance, safe and reliable, and extremely long service life.
2. The design and production of this product fully implement GB9706.1-2020 "Medical Electrical Apparatus - Part 1: Safety - General Requirements", which is guaranteed in safety.

III Main technical parameters

1. Rated voltage: AC100-240V 50Hz/60Hz
2. Input power: ≤40VA
3. Fuse: F2AL250V*1
4. Product Specification: LED-70W
5. Product color temperature: 5300±500K
6. Lamp head diameter: 300mm

7. Working distance: 700mm

IV Security tips and symbol instructions

1.Before use, please read and understand all the contents in the instruction manual and operate strictly in accordance with the requirements.
2.The installation and commissioning of operation lamp must be carried out by professionals.
3.Before cleaning the operation lamp, turn off power and unplug, do not use liquid or spray cleaner.
4.Do not use this product near water. Do not place any objects on the power cord of the operation lamp.
5.When changing the bulb, you must first turn off the power switch and unplug the power cord.
6.Maintenance of the operation lamp must be operated by professional personnel. It is recommended that the operator wear an electrostatic ring to work.
7.The brightness of the surgical lighting fixture is quite high and it must not be used for direct eye illumination!
8.Illustration of symbols:

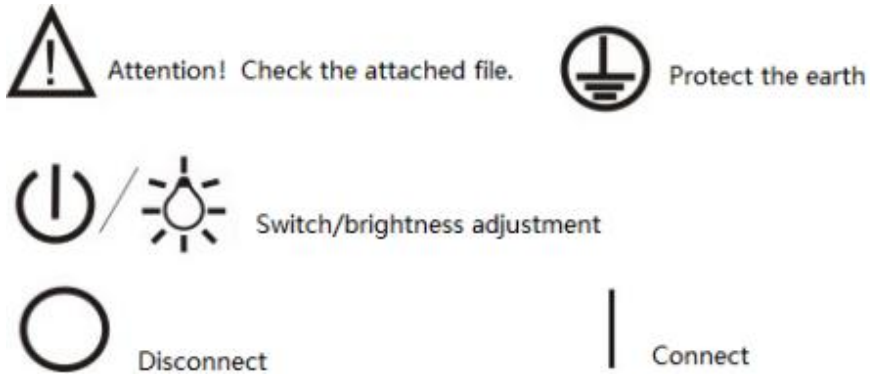

of dust with medical gauze or a soft brush to maintain the illuminance.
7.It is strictly prohibited to hang any items other than this equipment on the operation lamp body. Do not heavily pull or rotate the lamp head or lamp arm when in use. The lamp head must not be rotated around the steering joint!
8.The bulbs are consumables with a basic lifespan. For LED bulbs, the normal lifespan is around 10,000 hours. Pay attention to the usage time of the bulbs and make preparations in advance.
9.The service life of the operation lamp is five years. After the expiration, if it is scrapped, its metal, electronic components, plastic, glass and other materials should be uniformly and strictly treated in accordance with local environmental protection regulations to prevent their spread or reuse, minimizing the risk of environmental pollution.

IX Failure judgment and eliminating methods

（This requires professional operation）

Phenomena	Reason	Solution
Lamp doesn't work.	1.The power switch⑫ is not on.	Turn on the power switch.
	2.AC power supply circuit is no electricity.	Switch to a live supply line.
	3.The fuse has blown.	Open the fuse box⑪ and replace the fuse with the same specification.
	4.The switch is not turned on.	Touch switch/brightness adjustment③ to turn on the light.
	5.The plug-in connection was not done properly.	Check the plugins in Picture 2-1、2 and Picture 3-1、3, and reconnect them firmly.
	6.The power board is damaged.	Replace the power board with the same specification.
	7.Other faults	Contact the service department of our company.

unusable.]

5)When the operation lamp needs to be moved to a new position, first turn off the power and remove the power cord. Release the foot brakes⑩, hold the handle⑥ and push it to the flat and suitable usage position. Lock the foot brakes⑩ and then connect the power cord.

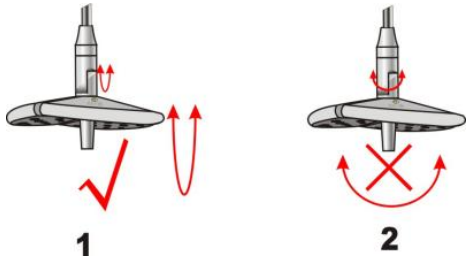

Picture 4

VIII Attentions

1.When using or moving the operation lamp, the tilt Angle should not exceed 5°. It should be placed on a flat ground, away from pedestrian passages, and the casters with foot brakes should be locked. When adjusting the height position of the lamp head, it should be pulled up and down vertically.

2.Spare fuses and bulbs should be placed in the workplace close to the operation lamp, and their specifications and models should meet the basic parameter requirements.

3.The old bulbs and other accessories replaced from the operation lamp should be placed in the designated waste bin.

4.Every two month, use 75% alcohol cotton to remove dust on the surface of the operation lamp.[Note: Unplug the power cord before cleaning. After cleaning, place the lamp in a well-ventilated environment for 30 minutes.]

5.Conduct a comprehensive inspection of nut, damping, switch, brightness and noise of the operation lamp every quarter, timely repair and adjustment if any abnormality is found.

6.The lens surface of the operation lamp should be frequently cleaned

V Working environment

Environment temperature: -5℃ ~40℃

Relative humidity: 35%~75%

Atmospheric pressure:700hPa～1060hPa

VI Product interface(Picture 1)

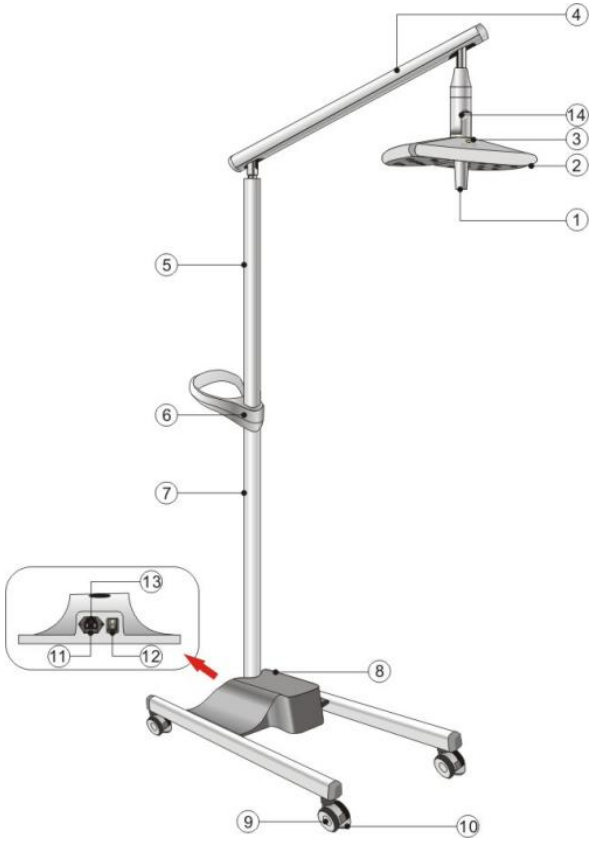

①Center handle ②Lamp head ③Switch/Brightness adjustment ④Spring arm ⑤ Central column 2 ⑥Handle ⑦Central column 1 ⑧Base ⑨Foot casters ⑩Foot brake ⑪Fuse box ⑫Power switch ⑬Power socket ⑭Steering joint

Picture 1

VII Usage

1.Check before use

1)Unpack and check whether the product is damaged or missing parts

2)According to the Configuration List, check whether the product model, name, quantity and accessories are consistent with the Configuration List;If any problem is found, please contact manufacturer in time.

3)Read the instructions carefully and follow the installation steps.

2.Product installation

1)First, remove the two screws from the base connection piece, firmly connect the power plug, connect the central column 1⑦ with the base connection piece, then install the two fixing screws. Do not tighten them yet. After both screws are installed, tighten them separately. Remove the fixing screws of the two side handles and install the handles onto the central column 1⑦. Refer to Picture 2-1、2.

2)First, remove the two fixing screws on the central column connection piece. Firmly connect the power plugs of the central column 2⑤ and the central column 1⑦. Then, connect the central column 2⑤ and the central column 1⑦ together. Install two fixing screws, do not tighten them yet. After both screws are installed, tighten them separately.

3)First, remove the two fixing screws on the central column 2⑤. Move the handle upwards and align it with the fixing screw holes. Then install four fixing screws of the handle. Do not tighten them yet. After all the screws are installed, tighten them separately. Refer to Picture 2-3、4.

Picture 2

4)First, remove the two fixing screws on the connection piece of the spring arm④, firmly connect the power plug, then connect the connection piece of the spring arm④ with the central column 2⑤, install two fixing screws, and tighten them one by one after all the screws are installed. Refer to Picture 3-1、2.

5)First, remove the fixing screws on the connection piece of the lamp head②, firmly connect the power plug, then connect the lamp head② with the spring arm④, install the fixing screws and tighten them, finally rotate the central handle① in the direction indicated by the arrow and install it. The operation lamp is installed. See Picture 3-3、4.

Picture 3

3.Usage

1)Connect the power cord to the network power supply and the power socket. Then turn on the power switch. The operation lamp will light up.

2)This operation lamp has three levels of brightness adjustment. When the power switch is turned off and then turned on again, the brightness will be at its maximum.

3)Touching switch/brightness adjustment③ can reduce the brightness all the way down to the off position.

4)By holding the central handle, you can adjust the position and angle of the lighting. You can also perform a 90° turn adjustment along the vertical gap using the steering joint⑭, as indicated by the arrows in Picture 4-1; [Note! Do not turn as indicated by the arrows in Picture 4-2. This will cause damage to the joint and make the operation lamp